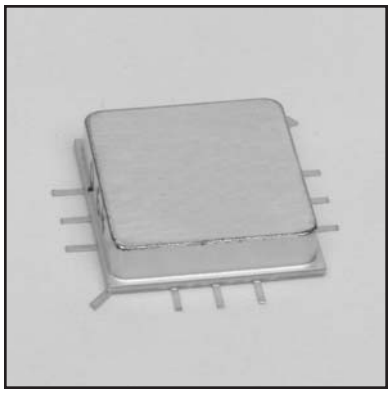

MODEL NUMBER DAT15015

GaAs 1 Section Attenuator

FEATURES

- 20-700 MHz
- 0.4 mA, +5 VDC
- 22nSec Switching Speed
- 10 nSec Rise Time
- 10, 20, or 30 dB Steps
- TTL Driver

1 BIT

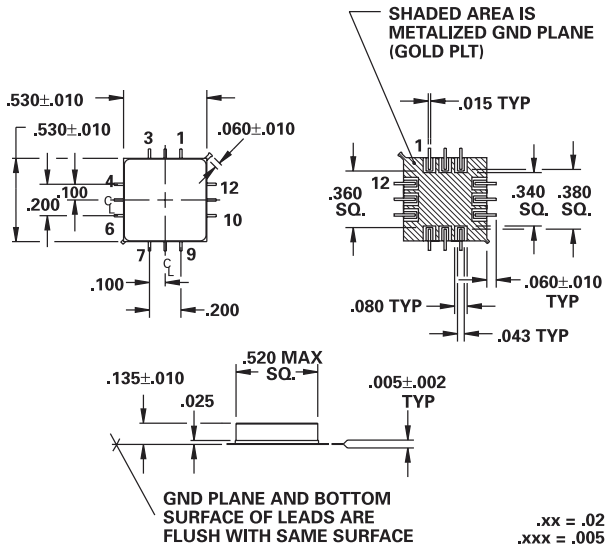

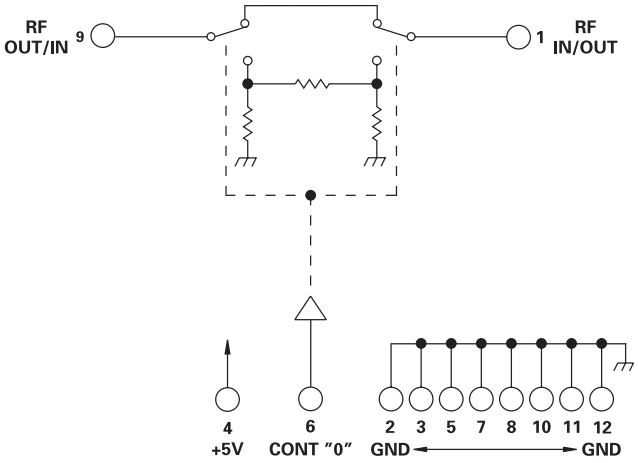

TYPICAL PERFORMANCE
at 25°C

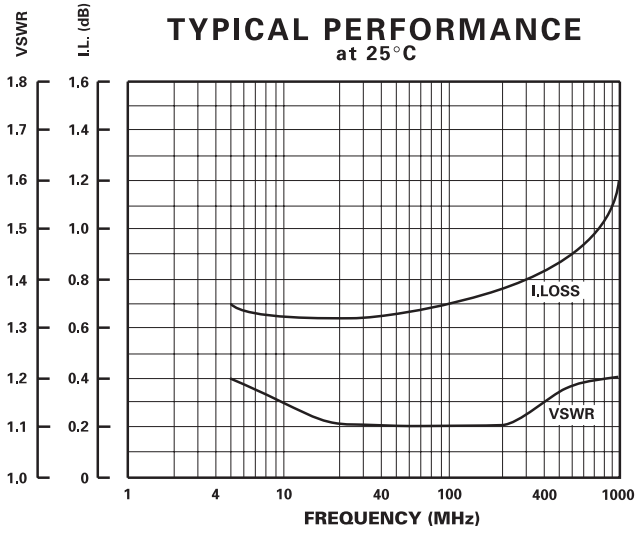

TABULATION CHART	
Part Number	Attenuation
DAT15015	10 dB ± .35 dB
DAT15016	20 dB ± .55 dB
DAT15017	30 dB ± .75 dB

GUARANTEED PERFORMANCE

Parameter		Min	Typ	Max	Units	Conditions
Operating Frequency		20		700	MHz	
DC Current			0.2	1.0	mA	At +5 VDC Supply
Control Type			TTL			1 Line, Reverse Logic Available Logic "0" = Thru Logic "1" = Attenuation
Control Current	*High*		0	±20	µA	VIH = +3.0 V
	Low		0	±20	µA	VIL = +0.5 V
Insertion Loss			1.0	1.5	dB	
Attenuation	*LSB*				dB	See Table
	Range				dB	See Table
	Accuracy				dB	See Table
VSWR			1.1/1	1.25/1		
Impedance			50		OHMS	
Switching Speed			20	35	nSec	50% TTL to 90% / 10% RF
Transition (Rise/Fall) Time			10		nSec	90% / 10% or 10% / 90% RF
Switching (Video) Transients			45		mV	Peak Value
Intercept Points	*2nd*		+68		dBm	140 MHz / 200 MHz
	3rd		+35		dBm	140 MHz / 100 MHz
RF Power	*Operate*		+12	+10	dBm	0.1 dB Compression
	No Damage			+27	dBm	
Operating Temperature		-55	+25	+125	°C	TA